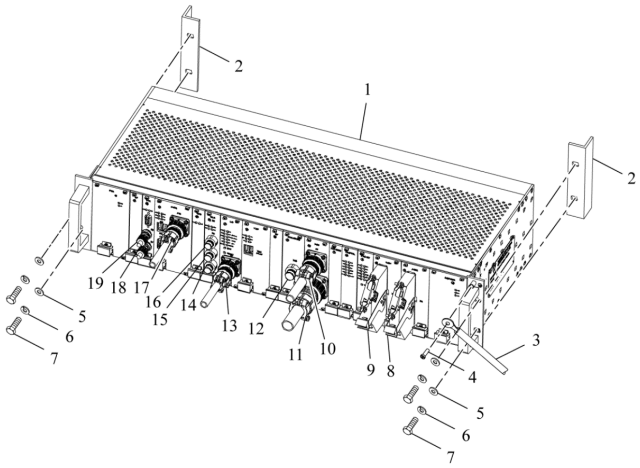

1. CRA
2. Electric Locker Bracket
3. Ground Cable
4. 1/4" Screw
5. 1/4" Plain Washer
6. 1/4" Spring Washer
7. 1/4" Hex Bolt
8. X5 Connector
9. X4 Connector
10. X1 Connector
11. X2 Connector
12. X16 Connector
13. X3 Connector
14. X9 Connector
15. X10 Connector
16. X11 Connector
17. X15 Connector
18. X6 Connector
19. X7 Connector

Figure 10.116 Communication Rack A (CRA) Replacement

10.7.11 Power Supply Assembly (PSA) Board Replacement

Part List					
Part Numbers			Vendor Code	Item Description	IPC Reference
HRC	Vendor	DTP			
-	R1D00028 3	-	WJIS	Power Supply Assembly Board	Figure 10.18

Consumables			Special Tools/Test Equipment
Item	Part Number	Qty	Description
-	-	-	-

(1) Follow the safety precautions and handling procedures described in Section 10.2.2 before proceeding with this maintenance task.

(2) The PSA board is part of the CRA installed on each car. Refer to Figure 10.7 for the location of the CRA and Figure 10.74 for the location of the PSA board on the CRA.

(3) Make sure that the COMCB is in the OFF position.

10.7.11.1 Removal

(1) Open the left side electric locker top access door to access the CRA (refer to Figure 10.117, item 1).

(2) Remove the three screws (3) securing the PSA board (2) to the CRA (1).

(3) Remove the faulty PSA board (2) from the CRA (1).

10.7.11.2 Installation

(1) Place the new PSA board (refer to Figure 10.117, item 2) into the CRA (1) in the same location, position, and orientation as the PSA board removed in Section 10.7.11.1.

(2) Secure the PSA board (2) to the CRA (1) using the three screws (3) removed in Section 10.7.11.1.

(3) Close the left side electric locker top access door.

(4) Turn ON the COMCB.

(5) Verify using the MDS CDT that the latest communication system software is installed on all communication system components.

(6) Perform a functional test (refer to Section 10.8.1).

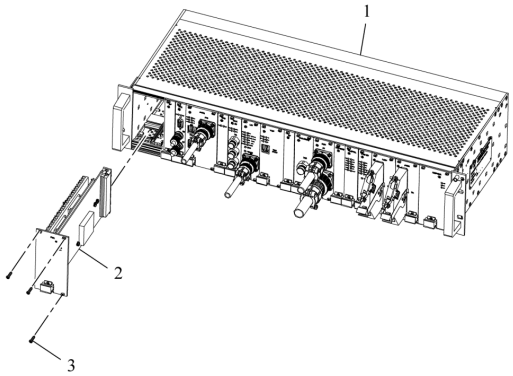

1. CRA
2. PSA Board
3. Screw, M2.5 x 10 x 0.45P

Figure 10.117 Power Supply Assembly (PSA) Board Replacement

10.7.12 Video Transmission (VTX) Board Replacement

Part List					
Part Numbers			Vendor Code	Item Description	IPC Reference
HRC	Vendor	DTP			
-	R1D00030 4	-	WJIS	Video Transmission Board	Figure 10.18

Consumables			Special Tools/Test Equipment
Item	Part Number	Qty	Description
-	-	-	-

(1) Follow the safety precautions and handling procedures described in Section 10.2.2 before proceeding with this maintenance task.

(2) The VTXB is part of the CRA installed on each car. Refer to Figure 10.7 for the location of the CRA and Figure 10.74 for the location of the VTXB on the CRA.

(3) Make sure that the COMCB is in OFF the position.

10.7.12.1 Removal

(1) Open the left side electric locker top access door to access the CRA (refer to Figure 10.118, item 1).

(2) Disconnect the X6 and X7 connectors (3) from the VTXB (2).

(3) Remove the two screws (4) securing the VTXB (2) to the CRA (1).

(4) Remove the faulty VTXB (2) from the CRA (1)

10.7.12.2 Installation

(1) Position the new VTXB (refer to Figure 10.118, item 2) into the CRA (1) in the same location and orientation as the VTXB removed in Section 10.7.12.1.

(2) Secure the VTXB (2) to the CRA (1) using the two screws (4) removed in Section 10.7.12.1.

(3) Reconnect the X6 and X7 connectors (3) to the VTXB (2).

(4) Close the left side electric locker top access door.

(5) Turn ON the COMCB.

(6) Verify using the MDS CDT that the latest communication system software is installed on all communication system components.

(7) Perform a functional test (refer to Section 10.8.1).

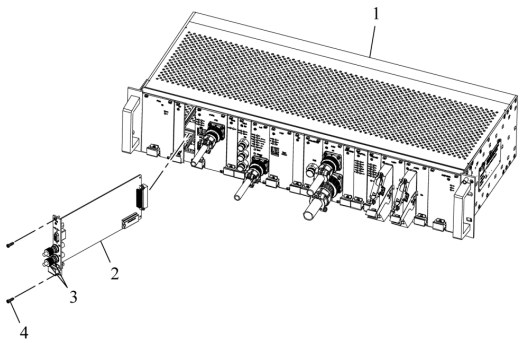

1. CRA
2. VTXB
3. X6, X7 Connectors
4. Screw, M2.5 x 10 x 0.45P

Figure 10.118 Video Transmission Board (VTXB) Replacement

10.7.13 Content and Control Server (CNCS) Board Replacement

Part List					
Part Numbers			Vendor Code	Item Description	IPC Reference
HRC	Vendor	DTP			
-	R1D00025 3	-	WJIS	Content and Control Server Board	Figure 10.18

Consumables			Special Tools/Test Equipment
Item	Part Number	Qty	Description
-	-	-	-

(1) Follow the safety precautions and handling procedures described in Section 10.2.2 before proceeding with this maintenance task.

(2) The CNCS board is part of the CRA installed on each car. Refer to Figure 10.7 for the location of the CRA and Figure 10.74 for the location of the CNCS board on the CRA.

(3) Make sure that the COMCB is in the OFF position.

10.7.13.1 Removal

(1) Open the left side electric locker top access door to access the CRA (refer to Figure 10.119, item 1).

(2) Disconnect the X12, X13, and X15 connectors (3) from the CNCS board (2).

(3) Remove the three screws (4) securing the CNCS board (2) to the CRA (1).

(4) Remove the faulty CNCS board (2) from the CRA (1).

10.7.13.2 Installation

(1) Place the new CNCS board (refer to Figure 10.119, item 2) into the CRA (1) in the same location, position, and orientation as the CNCS board removed in the Section 10.7.13.1.

(2) Secure the CNCS board (2) to the CRA (1) using the three screws (4) removed in Section 10.7.13.1.

(3) Reconnect the X12, X13, and X15 connectors (3) to the CNCS board (2).

(4) Close the left side electric locker top access door.

(5) Turn ON the COMCB.

(6) Verify using the MDS CDT that the latest communication system software is installed on all communication system components.

(7) Perform the CNCS board IP Setting checks described in Section 10.7.10.3.

(8) Perform a functional test (refer to Section 10.8.1).

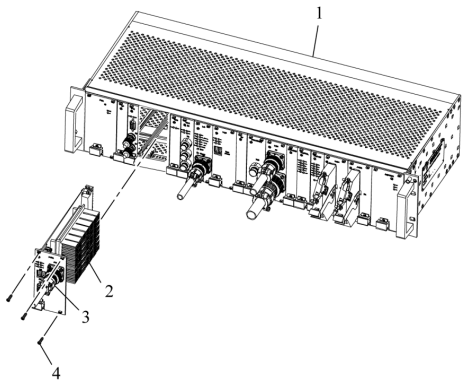

1. CRA
2. CNCS Board
3. X12, X13, and X15 Connectors
4. Screw, M2.5 x 10 x 0.45P

Figure 10.119 Content and Control Server (CNCS) Board Replacement

10.7.14 Hard Disk Drive (HDD) Board Replacement

Part List					
Part Numbers			Vendor Code	Item Description	IPC Reference
HRC	Vendor	DTP			
-	R1D00025 8	-	WJIS	Hard Disk Drive Board	Figure 10.18

Consumables			Special Tools/Test Equipment
Item	Part Number	Qty	Description
-	-	-	-

(1) Follow the safety precautions and handling procedures described in Section 10.2.2 before proceeding with this maintenance task.

(2) The HDD board is a part of CRA installed on each car. Refer to Figure 10.7 for the location of the CRA and Figure 10.74 for the location of the HDD board on the CRA.

(3) Make sure that the COMCB is in the OFF position.

10.7.14.1 Removal

(1) Open the left side electric locker top access door to access the CRA (refer to Figure 10.120, item 1).

(2) Remove the two screws (3) securing the HDD board (2) to the CRA (1).

(3) Remove the faulty HDD board (2) from the CRA (1).

10.7.14.2 Installation

(1) Place the new HDD board (refer to Figure 10.120, item 2) into the CRA (1) in the same location, position, and orientation as the HDD board removed in Section 10.7.14.1.

(2) Secure the HDD board (2) to the CRA (1) using the two screws (3) removed in Section 10.7.14.1.

(3) Close the left side electric locker top access door.

(4) Turn ON the COMCB.

(5) Verify using the MDS CDT that the latest communication system software is installed on all communication system components.

(6) Perform the HDD board IP Setting checks described in Section 10.7.10.3.

(7) Perform a functional test (refer to Section 10.8.1).

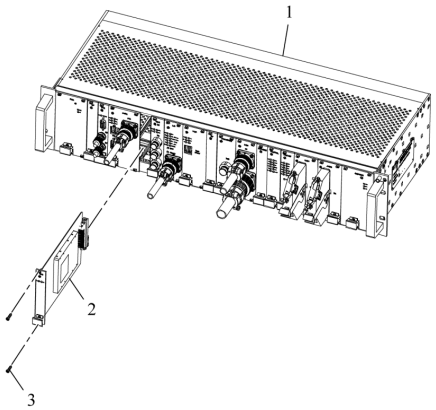

1. CRA
2. HDD Board
3. Screw, M2.5 x 10 x 0.45P

Figure 10.120 Hard Disk Drive (HDD) Board Replacement

10.7.15 Wireless LAN Router (WLR) Board Replacement

Part List					
Part Numbers			Vendor Code	Item Description	IPC Reference
HRC	Vendor	DTP			
-	R1D00030 8	-	WJIS	Wireless LAN Router Board	Figure 10.18

Consumables			Special Tools/Test Equipment
Item	Part Number	Qty	Description
-	-	-	-

(1) Follow the safety precautions and handling procedures described in Section 10.2.2 before proceeding with this maintenance task.

(2) The WLR board is part of the CRA installed on each car. Refer to Figure 10.7 for the location of the CRA and Figure 10.74 for the location of the WLR board on the CRA.

(3) Make sure that the COMCB is in the OFF position.

10.7.15.1 Removal

(1) Open the left side electric locker top access door to access the CRA (refer to Figure 10.121, item 1).

(2) Disconnect the X8, X9, X10, and X11 connectors (3) from the WLR board (2).

(3) Remove the two screws (4) securing the WLR board (2) to the CRA (1).

(4) Remove the faulty WLR board (2) from the CRA (1).

10.7.15.2 Installation

(1) Place the new WLR board (refer to Figure 10.121, item 2) into the CRA (1) in the same location, position, and orientation as the WLR board removed in Section 10.7.15.1.

(2) Secure the WLR board (2) to the CRA (1) using the two screws (4) removed in Section 10.7.15.1.

(3) Reconnect the X8, X9, X10, and X11 connectors (3) to the WLR board (2).

(4) Close the left side electric locker top access door.

(5) Turn ON the COMCB.

(6) Verify using the MDS CDT that the latest communication system software is installed on all communication system components.

(7) Perform a functional test (refer to Section 10.8.1).

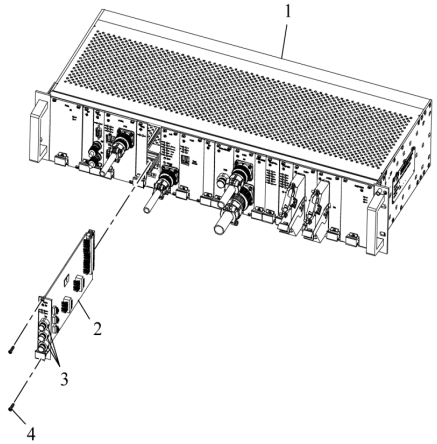

1. CRA
2. WLR Board
3. X8, X9, X10, X11 Connectors
4. Screw, M2.5 x 10 x 0.45P

Figure 10.121 Wireless LAN Router (WLR) Board Replacement

10.7.16 Voice Over Internet Protocol (VOIP) Board Replacement

Part List					
Part Numbers			Vendor Code	Item Description	IPC Reference
HRC	Vendor	DTP			
-	R1D00030 0	-	WJIS	VOIP Board	Figure 10.18

Consumables			Special Tools/Test Equipment
Item	Part Number	Qty	Description
-	-	-	-

(1) Follow the safety precautions and handling procedures described in Section 10.2.2 before proceeding with this maintenance task.

(2) The VOIP is part of the CRA installed on each car. Refer to Figure 10.7 for the location of the CRA and Figure 10.74 for the location of the VOIP board on the CRA.

(3) Make sure that the COMCB is in the OFF position.

10.7.16.1 Removal

(1) Open the left side electric locker top access door to access the CRA (refer to Figure 10.122, item 1).

(2) Remove the three screws (3) securing the VOIP board (2) to the CRA (1).

(3) Remove the faulty VOIP board (2) from the CRA (1).

10.7.16.2 Installation

(1) Place the new VOIP board (refer to Figure 10.122, item 2) into the CRA (1) in the same location, position, and orientation as the VOIP board removed in Section 10.7.16.1.

(2) Secure the VOIP board (2) to the CRA (1) using the three screws (3) removed in Section 10.7.16.1.

(3) Close the left side electric locker top access door.

(4) Turn ON the COMCB.

(5) Verify using the MDS CDT that the latest communication system software is installed on all communication system components.

(6) Perform the VOIP board IP Setting checks described in Section 10.7.10.3.

(7) Perform a functional test (refer to Section 10.8.1).

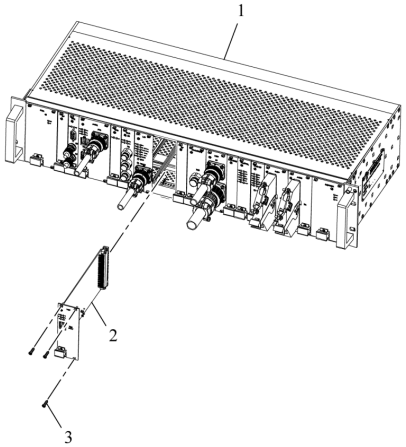

1. CRA
2. VOIP Board
3. Screw, M2.5 x 10 x 0.45P

Figure 10.122 Voice Over Internet Protocol (VOIP) Board Replacement

10.7.17 LonWorks Interface Card (LIC) Board Replacement

Part List					
Part Numbers			Vendor Code	Item Description	IPC Reference
HRC	Vendor	DTP			
-	R1D00026 2	-	WJIS	LonWorks Interface Card Board	Figure 10.18

Consumables			Special Tools/Test Equipment
Item	Part Number	Qty	Description
-	-	-	-

(1) Follow the safety precautions and handling procedures described in Section 10.2.2 before proceeding with this maintenance task.

(2) The LIC board is part of the CRA installed on each car. Refer to Figure 10.7 for the location of the CRA and Figure 10.74 for the location of the LIC board on the CRA.

(3) Make sure that the COMCB is in the OFF position.

10.7.17.1 Removal

(1) Open the left side electric locker top access door to access the CRA (refer to Figure 10.123, item 1).

(2) Disconnect the X3 connector (3) from the LIC board (2).

(3) Remove the three screws (4) securing the LIC board (2) to the CRA (1).

(4) Remove the faulty LIC board (2) from the CRA (1).

10.7.17.2 Installation

(1) Place the new LIC board (refer to Figure 10.123, item 2) into the CRA (1) in the same location, position, and orientation as the LIC board removed in Section 10.7.17.1.

(2) Secure the LIC board (2) to the CRA (1) using the three screws (4) removed in Section 10.7.17.1.

(3) Reconnect the X3 connector (3) to the LIC board (2).

(4) Close the left side electric locker top access door.

(5) Turn ON the COMCB.

(6) Verify using the MDS CDT that the latest communication system software is installed on all communication system components.

(7) Perform a functional test (refer to Section 10.8.1).

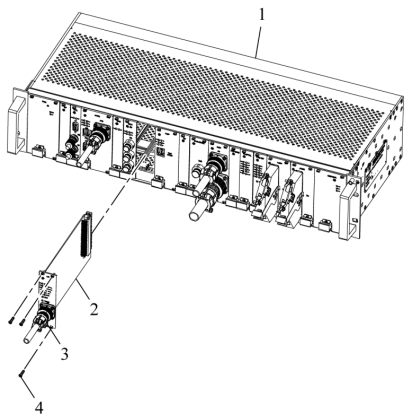

1. CRA
2. LIC Board
3. X3 Connector
4. Screw, M2.5 x 10 x 0.45P

Figure 10.123 LonWorks Interface Card (LIC) Board Replacement

10.7.18 PA Controller – RS485 Board Replacement

Part List					
Part Numbers			Vendor Code	Item Description	IPC Reference
HRC	Vendor	DTP			
-	R1D00026 6	-	WJIS	Public Address Controller – RS485 Board	Figure 10.18

Consumables			Special Tools/Test Equipment
Item	Part Number	Qty	Description
-	-	-	-

(1) Follow the safety precautions and handling procedures described in Section 10.2.2 before proceeding with this maintenance task.

(2) The PAC-RS485 board is part of the CRA installed on each car. Refer to Figure 10.7 for the location of the CRA and Figure 10.74 for the location of the PAC-RS485 board on the CRA.

(3) Make sure that the COMCB is in the OFF position.

10.7.18.1 Removal

(1) Open the left side electric locker top access door to access the CRA (refer to Figure 10.124, item 1).

(2) Disconnect the X16 connector (3) from the PAC–RS485 board (2).

(3) Remove the three screws (4) securing the PAC-RS485 board (2) to the CRA (1).

(4) Remove the faulty PAC-RS485 board (2) from the CRA (1).

10.7.18.2 Installation

(1) Place the new PAC-RS485 board (refer to Figure 10.124, item 2) into the CRA (1) in the same location, position, and orientation as the PAC-RS485 board removed in Section 10.7.18.1.

(2) Secure the PAC-RS485 board (2) to the CRA (1) using the three screws (4) removed in Section 10.7.18.1.

(3) Reconnect the X16 connector (3) to the PAC–RS485 board (2).

(4) Close the left side electric locker top access door.

(5) Turn ON the COMCB.

(6) Verify using the MDS CDT that the latest communication system software is installed on all communication system components.

(7) Perform a functional test (refer to Section 10.8.1).

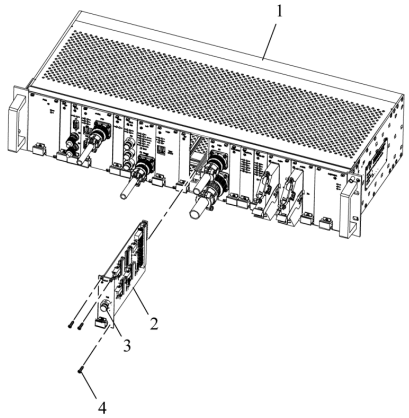

1. CRA
2. PAC – RS485 Board
3. X16 Connector
4. Screw, M2.5 x 10 x 0.45P

Figure 10.124 PA Controller – RS485 Board Replacement

10.7.19 Signal Control Board (SCB) Replacement

Part List					
Part Numbers			Vendor Code	Item Description	IPC Reference
HRC	Vendor	DTP			
-	R1D00029 2	-	WJIS	Signal Control Board	Figure 10.18

Consumables			Special Tools/Test Equipment
Item	Part Number	Qty	Description
-	-	-	-

(1) Follow the safety precautions and handling procedures described in Section 10.2.2 before proceeding with this maintenance task.

(2) The SCB is part of the CRA installed on each car. Refer to Figure 10.7 for the location of the CRA and Figure 10.74 for the location of the SCB on the CRA.

(3) Make sure that the COMCB is in the OFF position.

10.7.19.1 Removal

(1) Open the left side electric locker top access door to access the CRA (refer to Figure 10.125, item 1).

(2) Disconnect the X1 connector (3) and X2 connector (4) from the SCB (2).

(3) Remove the three screws (5) securing the SCB (2) to the CRA (1).

(4) Remove the faulty SCB (2) from the CRA (1).

10.7.19.2 Installation

(1) Position the new SCB (refer to Figure 10.125, item 2) into the CRA (1) in the same location and orientation as the SCB removed in Section 10.7.19.1.

(2) Secure the SCB (2) to the CRA (1) using the three screws (5) removed in Section 10.7.19.1.

(3) Reconnect the X1 connector (3) and X2 connector (4) to the SCB (2).

(4) Close the left side electric locker top access door.

(5) Turn ON the COMCB.

(6) Verify using the MDS CDT that the latest communication system software is installed on all communication system components.

(7) Perform a functional test (refer to Section 10.8.1).

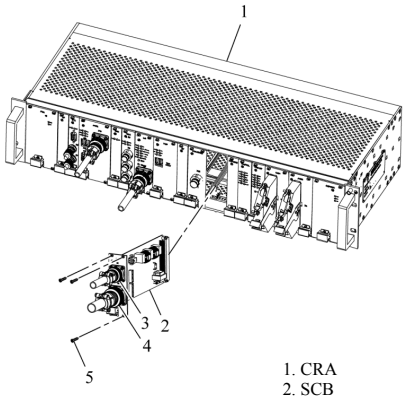

1. CRA
2. SCB
3. X1 Connector
4. X2 Connector
5. Screw, M2.5 x 10 x 0.45P

Figure 10.125 Signal Control Board (SCB) Replacement

10.7.20 PA Controller – MCU Board Replacement

Part List					
Part Numbers			Vendor Code	Item Description	IPC Reference
HRC	Vendor	DTP			
-	R1D00027 4	-	WJIS	Public Address Controller – MCU Board	Figure 10.18

Consumables			Special Tools/Test Equipment
Item	Part Number	Qty	Description
-	-	-	-

(1) Follow the safety precautions and handling procedures described in Section 10.2.2 before proceeding with this maintenance task.

(2) The PAC-MCU is a part of CRA installed on each car. Refer to Figure 10.74.

(3) Make sure that COMCB is in the OFF position.

10.7.20.1 Removal

(1) Open the left side electric locker top access door to access the CRA (refer to Figure 10.126, item 1).

(2) Remove the two screws (3) securing the PAC-MCU board (2) to the CRA (1).

(3) Remove the faulty PAC-MCU board (2) from the CRA (1).

10.7.20.2 Installation

(1) Place the new PAC-MCU board (refer to Figure 10.126, item 2) into the CRA (1) in the same location, position, and orientation as the PAC-MCU board removed in Section 10.7.20.1.

(2) Secure the PAC-MCU board (2) to the CRA (1) using the two screws (3) removed in Section 10.7.20.1.

(3) Close the left side electric locker top access door.

(4) Turn ON the COMCB.

(5) Verify using the MDS CDT that the latest communication system software is installed on all communication system components.

(6) Perform a functional test (refer to Section 10.8.1).

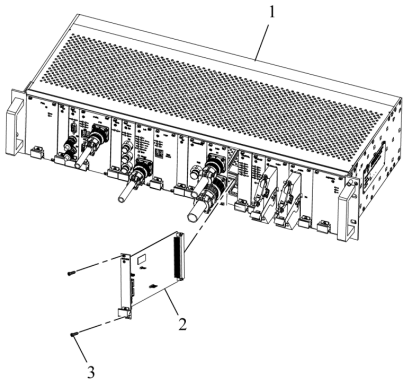

1. CRA
2. PAC – MCU Board
3. Screw, M2.5 x 10 x 0.45P

Figure 10.126 PA Controller – MCU Board Replacement

10.7.21 PA Controller – Volume (VOL) Board Replacement

Part List					
Part Numbers			Vendor Code	Item Description	IPC Reference
HRC	Vendor	DTP			
-	R1D00027 8	-	WJIS	Public Address Controller – VOL Board	Figure 10.18

Consumables			Special Tools/Test Equipment
Item	Part Number	Qty	Description
-	-	-	-

(1) Follow the safety precautions and handling procedures described in Section 10.2.2 before proceeding with this maintenance task.

(2) The PAC-VOL board is part of the CRA installed on each car. Refer to Figure 10.7 for the location of the CRA and Figure 10.74 for the location of the PAC-VOL board on the CRA.

(3) Make sure that the COMCB is in the OFF position.

10.7.21.1 Removal

(1) Open the electric locker door to access the CRA (refer to Figure 10.127, item 1).

(2) Remove the two screws (3) securing the PAC-VOL board (2) to the CRA (1).

(3) Remove the faulty PAC-VOL board (2) from the CRA (1).

10.7.21.2 Installation

(1) Place the new PAC-VOL board (refer to Figure 10.127, item 2) into the CRA (1) in the same location, position, and orientation as the PAC-VOL board removed in Section 10.7.21.1.

(2) Secure the PAC-VOL board (2) to the CRA (1) using the two screws (3) removed in Section 10.7.21.1.

(3) Close the left side electric locker top access door.

(4) Turn ON the COMCB.

(5) Verify using the MDS CDT that the latest communication system software is installed on all communication system components.

(6) Perform a functional test (refer to Section 10.8.1).

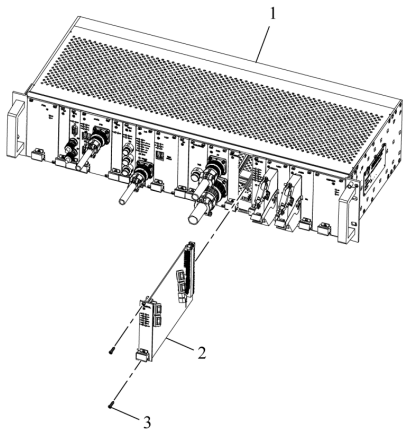

1. CRA
2. PAC – VOL board
3. Screw, M2.5 x 10 x 0.45P

Figure 10.127 PA Controller – VOL Board Replacement

10.7.22 PA Controller – INT Board Replacement

Part List					
Part Numbers			Vendor Code	Item Description	IPC Reference
HRC	Vendor	DTP			
-	R1D00027 0	-	WJIS	Public Address Controller – INT Board	Figure 10.18

Consumables			Special Tools/Test Equipment
Item	Part Number	Qty	Description
-	-	-	-

(1) Follow the safety precautions and handling procedures described in Section 10.2.2 before proceeding with this maintenance task.

(2) The PAC-INT board is part of the CRA installed on each car. Refer to Figure 10.7 for the location of the CRA and Figure 10.74 for the location PAC-INT board on the CRA.

(3) Make sure that the COMCB is in the OFF position.

10.7.22.1 Removal

(1) Open the left side electric locker top access door to access the CRA (refer to Figure 10.128, item 1).

(2) Remove the two screws (3) securing the PAC-INT board (2) to the CRA (1).

(3) Remove the faulty PAC-INT board (2) from the CRA (1).

10.7.22.2 Installation

(1) Place the new PAC-INT board (refer to Figure 10.128, item 2) into the CRA (1) in the same location, position, and orientation as the PAC-INT board removed in Section 10.7.22.1.

(2) Secure the PAC-INT board (2) to the CRA (1) using the two screws (3) removed in Section 10.7.22.1.

(3) Close the left side electric locker top access door.

(4) Turn ON the COMCB.

(5) Verify using the MDS CDT that the latest communication system software is installed on all communication system components.

(6) Perform a functional test (refer to Section 10.8.1).

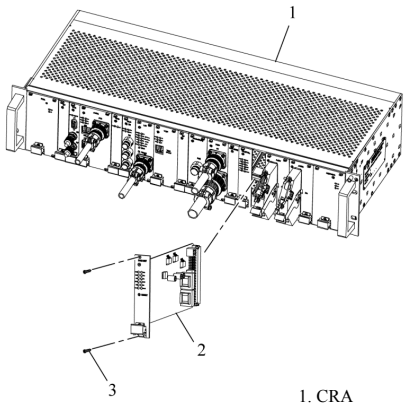

1. CRA
2. PAC – INT Board
3. Screw, M2.5 x 10 x 0.45P

Figure 10.128 PA Controller – INT Board Replacement

10.7.23 Audio Amplifier Board 1 (AAB1) Replacement

Part List					
Part Numbers			Vendor Code	Item Description	IPC Reference
HRC	Vendor	DTP			
-	R1D00024 2	-	-	Audio Amplifier Board 1	Figure 10.18

Consumables			Special Tools/Test Equipment
Item	Part Number	Qty	Description
-	-	-	-

(1) Follow the safety precautions and handling procedures described in Section 10.2.2 before proceeding with this maintenance task.

(2) The AAB1 is a part of the CRA installed on each car. Refer to Figure 10.7 for the location of the CRA and Figure 10.74 for the location of AAB1 on the CRA.

(3) Make sure that the COMCB is in the OFF position.

10.7.23.1 Removal

(1) Open the top access door of the left side electric locker to access the CRA (refer to Figure 10.129, item 1).

(2) Disconnect the X4 connector (3) from the AAB1 (2).

(3) Remove the three screws (4) securing the AAB1 (2) to the CRA (1).

(4) Remove the faulty AAB1 (2) from the CRA (1).

10.7.23.2 Installation

(1) Place the new AAB1 (refer to Figure 10.129, item 2) into the CRA (1) in the same location, position, and orientation as the AAB1 removed in Section 10.7.23.1.

(2) Secure the AAB1 (2) to the CRA (1) using the three screws (4) removed in Section 10.7.23.1.

(3) Reconnect the X4 connector (3) to the AAB1 (2).

(4) Close the top access door of the left side electric locker.

(5) Turn ON the COMCB.

(6) Verify using the MDS CDT that the latest communication system software is installed on all communication system components.

(7) Perform a functional test (refer to Section 10.8.1).

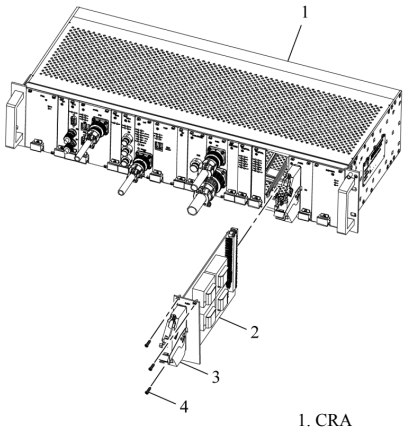

1. CRA
2. AAB1
3. X4 Connector
4. Screw, M2.5 x 10 x 0.45P

Figure 10.129 Audio Amplifier Board 1 (AAB1) Replacement

10.7.24 Audio Amplifier Board 2 (AAB2) Replacement

Part List					
Part Numbers			Vendor Code	Item Description	IPC Reference
HRC	Vendor	DTP			
-	R1D00024 5	-	-	Audio Amplifier Board 2	Figure 10.18

Consumables			Special Tools/Test Equipment
Item	Part Number	Qty	Description
-	-	-	-

(1) Follow the safety precautions and handling procedures described in Section 10.2.2 before proceeding with this maintenance task.

(2) The AAB2 is a part of the CRA installed on each car. Refer to Figure 10.7 for the location of the CRA and Figure 10.74 for the location of the AAB2 on the CRA.

(3) Make sure that the COMCB is in the OFF position.

10.7.24.1 Removal

(1) Open the top access door of the left side electric locker to access the CRA (refer to Figure 10.130, item 1).

(2) Disconnect the X5 connector (3) from the AAB2 (2).

(3) Remove the three screws (4) securing the AAB2 (2) to the CRA (1).

(4) Remove the faulty AAB2 (2) from the CRA (1).

10.7.24.2 Installation

(1) Place the new AAB2 (refer to Figure 10.130, item 2) into the CRA (1) in the same location, position, and orientation as the AAB2 removed in Section 10.7.24.1.

(2) Secure the AAB2 (2) to the CRA (1) using the three screws (4) removed in Section 10.7.24.1.

(3) Reconnect the X5 connector (3) to the AAB2 (2).

(4) Close the top access door of the left side electric locker.

(5) Turn ON the COMCB.

(6) Verify using the MDS CDT that the latest communication system software is installed on all communication system components.

(7) Perform a functional test (refer to Section 10.8.1).

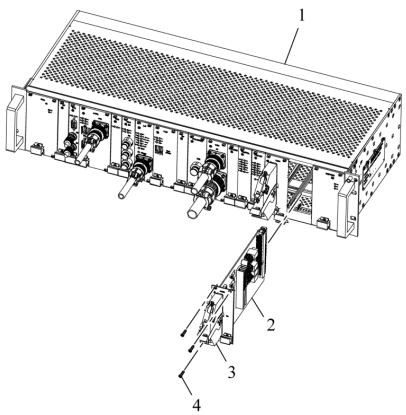

1. CRA
2. AAB2 Board
3. X5 Connector
4. Screw, M2.5 x 10 x 0.45P

Figure 10.130 Audio Amplifier Board 2 (AAB2) Replacement

10.7.25 Audio Amplifier Board - Power (AMP-PWR) Board Replacement

Part List					
Part Numbers			Vendor Code	Item Description	IPC Reference
HRC	Vendor	DTP			
-	R1D00024 9	-	WJIS	Audio Amplifier Power Board	Figure 10.18

Consumables			Special Tools/Test Equipment
Item	Part Number	Qty	Description
-	-	-	-

(1) Follow the safety precautions and handling procedures described in Section 10.2.2 before proceeding with this maintenance task.

(2) The AAB power board is a part of the CRA installed on each car. Refer to Figure 10.7 for the location of the CRA and Figure 10.74 for the location of the AAB power board on the CRA.

(3) Make sure that the COMCB is in the OFF position.

10.7.25.1 Removal

(1) Open the top access door of the left side electric locker to access the CRA (refer to Figure 10.131, item 1).

(2) Remove the three screws (3) securing the AAB power board (2) to the CRA (1).

(3) Remove the faulty AAB power board (2) from the CRA (1).

10.7.25.2 Installation

(1) Place the new AAB power board (refer to Figure 10.131, item 2) into the CRA (1) in the same location, position, and orientation as the AAB power board removed in Section 10.7.25.1.

(2) Secure the AAB power board (2) to the CRA (1) using the three screws (3) removed in Section 10.7.25.1.

(3) Close the top access door of the left side electric locker.

(4) Turn ON the COMCB.

(5) Verify using the MDS CDT that the latest communication system software is installed on all communication system components.

(6) Perform a functional test (refer to Section 10.8.1).

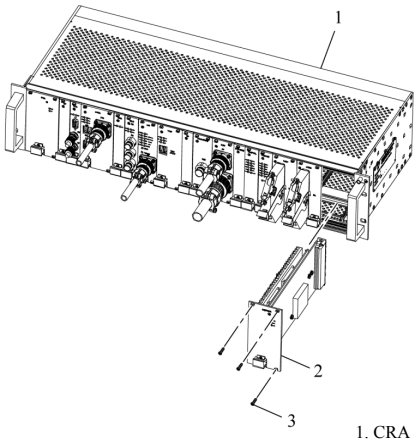

1. CRA
2. AAB Power Board
3. Screw, M2.5 x 10 x 0.45P

Figure 10.131 Audio Amplifier Board - Power (AAB-PWR) Board Replacement

10.7.26 Cab Speaker (CSP) Replacement

Part List					
Part Numbers			Vendor Code	Item Description	IPC Reference
HRC	Vendor	DTP			
RES18001CT0	R1D1473-25859	-	WJIS	Cab Speaker	Figure 10.6 and Figure 10.22

Consumables			Special Tools/Test Equipment
Item	Part Number	Qty	Description
-	-	-	-

(1) Follow the safety precautions and handling procedures described in Section 10.2.2 before proceeding with this maintenance task.

(2) The Cab Speaker (CSP) is installed on a panel above the operator's cab console. Refer to Figure 10.11 for the location of the cab speaker.

(3) Make sure that the COMCB is in the OFF position.

10.7.26.1 Removal

(1) Disconnect the CSP (refer to Figure 10.132, item 2) from the panel above the operator's cab console (1) by removing the four screws (3).

(2) Disconnect the car side connector (4) from the CSP (2).

(3) Remove the faulty CSP (2) from the panel above the operator's cab console (1).

10.7.26.2 Installation

(1) Place the new CSP (refer to Figure 10.132, item 2) in the same mounting location, position, and orientation as the CSP removed in Section 10.7.26.1.

(2) Reconnect the car side connector (4) to the new CSP (2).

(3) Secure the CSP (2) to the panel above the operator's cab console (1) using the four screws (3) removed in Section 10.7.26.1.

(4) Turn ON the COMCB.

(5) Perform a functional test (refer to Section 10.8.1).